Swing Turnstile manual book

SKU:
QDISTB20CM

Content

1.System Features

1. This control board is suitable for the control of wing gates, swing gates and quick-pass gates equipped with DC brushless motors.
2.This control board adopts ARM7 embedded system as the core of control. It has the advantages of faster processing speed, more powerful function expansion and more stable performance.
3.Adopt full data management, all function parameters are set digitally, setting operation is simpler.
4.The motor drive runs according to the movement curve, the operation is stable and reliable, the state is smooth, and the brake movement is coordinated and synchronized.
5.The equipment is fully functional, with an illegal break-in alarm, a trailing alarm, a reverse processing, an anti-pinch on the ram, and a free passage setting
6.Single or multiple people, motor stall protection, delay of exit passage, peak traffic mode, emergency traffic mode and other functions.
7.Complete interface mode, both PNP and NPN infrared beams on the market can be used. The infrared sensing sequence can be set up and down.
8.Customer-defined indicator output mode. The side lights and ceiling lights can be set according to the needs of the device to display the status of the lamp and the common cathode and common anode of the lamp.
9.The control panel comes with a voice broadcast function, and the directions of the greeting language at the entrance and exit can be set in the menu.

2.Technical Parameters

Input power:24-36V/3-10A(related to Motor)
Motor power:less than 70W brush less motor
standby power consumption:less than 3W
Infrared sensor interface:NPN normally open collector open circuit
Communication interface:RS232serial port
Communication protocol:MODBUS
Output power:DC12V ≤1A
standby battery:DC12V-24V
relative humidity:0-90%(No condensation)
environment temperature:-35C-75C

3. Motherboard wiring diagram

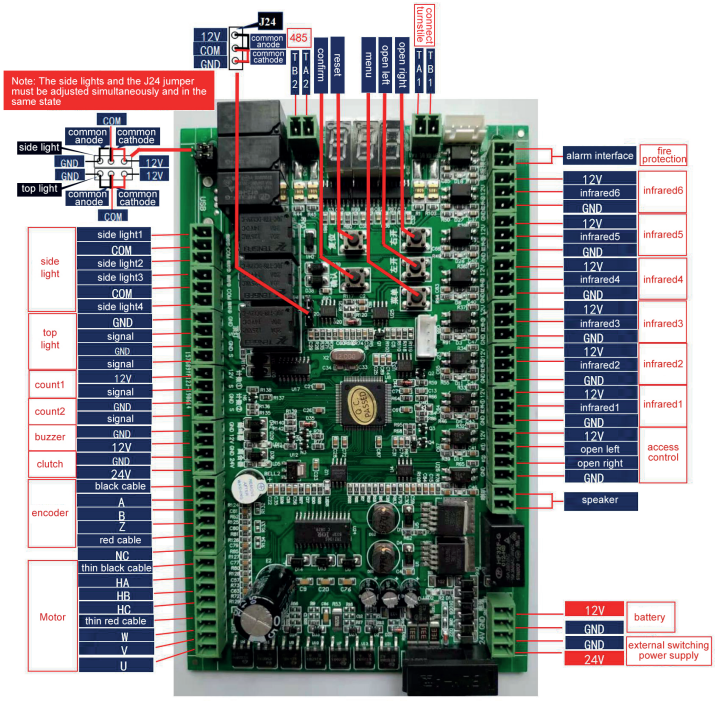

4.Port definition description

1.Input port definition:

- K1: Swipe (pass) signal input interface effective in K1 direction
- K2: Swipe (pass) signal input interface effective in K2 direction
- Alarm: illegal card swipe (pass) signal input interface / or safety door interlock signal input interface

- Fire: Fire signal input interface
- Infrared 1: The first input interface of the infrared sensor for the entrance in one direction
- Infrared 2: the second input interface of the infrared sensor for the entrance in one direction
- Infrared 3: the first input interface of the intermediate anti-pinch infrared sensor
- Infrared 4: the second input interface for the middle anti-pinch infrared sensor
- Infrared 5: the second input interface of the infrared sensor for the entrance in the other direction
- Infrared 6: the first input interface of the infrared sensor in the other direction

Note: 1. If you need to connect 8 pairs of infrared, infrared 3 and infrared 4 interfaces are connected in parallel to 2 pairs of infrared. L-17 parameter selection or select 6 pairs of infrared mode.
2. Infrared 3 and infrared 4 are respectively connected to one infrared channel for better effect. If you only want to connect one IR, please short IR 3 and IR 4 and then IR all the way, it will not work without shorting, please note! !!

2.Output interface definition:

- K1 green light: green light control port for K1 direction of top cover light (has 12V output)
- K2 green light: K2 direction green light control port (with 12V output)
- Red light: red light control port for roof light (has 12V output)
- Counter 1 output: Counting signal output (passive contact) after entering the chan nel in the direction of K1
- Counter 2 output: Count signal output (passive contact) after entering the channel in the direction of K2
- Main and auxiliary machine communication interface: TB1, TA1, two-core wire syn chronization main and auxiliary board wiring is the same.

5.Self-test before power on

Before powering on, please check the following items:

1. The power supply is a 24V 10A DC power supply.
2. Whether the polarity and sequence of all external wiring (power line, motor line), etc. are correct, and the connection is firm and the wiring is stable.

6. Power-on self-test setup process

Step1:
After the line is connected, the power-on motor will self-check left and right automatically. After the power-on, the direction of the self-test will be the entry direction. During the self-test in the entry direction, the value on the digital tube will decrease. Increasing changes should be set errors or wiring errors. Self-test cannot be completed and a long alarm sounds. Check the wiring and settings in time. After the self-test is completed, it will stay in a middle position.
Step 2:
Confirm the middle position of the damper (swing gate or quick-pass door): After pressing the confirmation key of the host for three sounds, release the confirmation key of the host and swing the swing arm to the center aligned position to confirm that the position of the gate of the main and auxiliary machines is correct After that, press the OK button again, and the buzzer position is saved after a beep. The intermediate position value of the master and slave will be saved. After each subsequent start-up, the brakes of the main and auxiliary machines will automatically return to this position after the self-test is completed.
Step 3:
Press the menu key to enter the setting mode. Open left to decrease and right open to increase.
Step 4:
After setting all parameters, press the menu key once, press the confirm key again to exit and save the parameters.

7. Mainboard parameter setting operation flow

1.operating procedures:

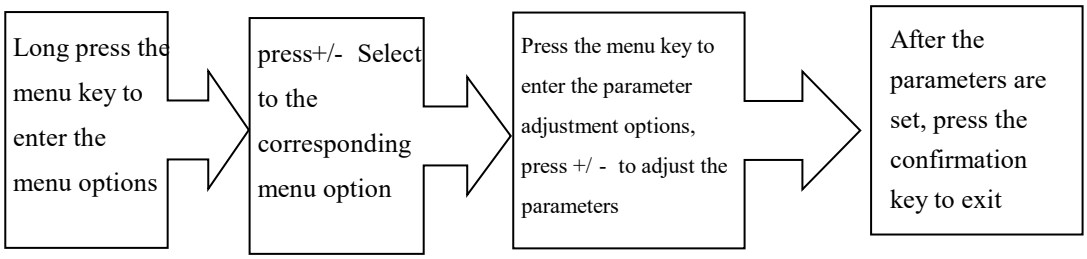

2.Digital tube display:

8.Parameter setting table

Menu number	Setting range	Defaults	Parameter Description
L-1	0-7	0	Motor mode and master and slave settings 0: Motor negative polarity, host 1: Motor positive polarity, host 2: Motor positive polarity, auxiliary machine 3: Motor negative polarity, auxiliary machine 4: Wing brake motor negative polarity, host 5: Wing brake motor positive polarity, host 6: Positive polarity of wing brake motor, auxiliary machine 7: Negative polarity of wing brake motor, auxiliary machine
L-2	0-6	1	0: Brushless motor without encoder (break through alarm and stop) 1: Brushless motor without encoder (break through alarm and close the door) 2: The brushless motor has an encoder (break through the alarm and stop) 3: Brushless motor has encoder (break through alarm and close door) 4: Brush motor encoder (break through alarm and stop) 5: Brushed motor encoder (break through alarm and close the door) 6: Wing turnstile mode
L-3	1-255	30	Left-hand door in-position position adjustment value, the larger the value, the more the gate stop position is closed
L-4	1-255	30	Right-hand door in -position position adjustment value, the larger the value, the more the gate stop position is closed

L-5	20-95	65	Door opening speed adjustment, the larger the number, the faster the speed, the smaller the number, the sl ower the door opening speed, the setting value is the ratio of the maximum speed of the motor
L-6	20-95	65	Door closing speed adjustment, the larger the number, the faster the speed, the smaller the number, the slower the door opening speed, the setting value is the ratio of the maximum speed of the motor
L-7	0-90	40	Deceleration stroke adjustment value, the setting value is to define the percentage of the deceleration section to the total stroke
L-8	1-40	3	Door closing in -place smoothness adjustment, th e larger the number, the faster the in-position speed, the smaller the number, the more stable the in-position speed
L-9	1-40	5	Anti-pinch response time
L-10	0-90	10	Anti-pinch strength adjustment value
L-11	0-90	6	After the door is opened, the shutter automatically closes time, 4 seconds, set the number of seconds
L-12	0-255	0	Door closing time adjustment value after passing, one value = 0.1 second
L-13	0-6	0	Mode selection: 0 normal traffic, 1 aging test mode
L-14	0-3	0	Access mode selection: 0: Enter and exit the cartoon line 1: Out: Swipe, In: Free 2. Out: Free, In: Swipe 3. Freedom of access
L-15	0/1	0	0: do not remember the number of swipes, 1: remember the number of swipes
L-16	0/1	0	Infrared radio polarity selection, 0: NPN, 1: PNP
L-17	0/1	1	0: 6 pairs infrared, 1: 4 pairs infrared
L-18	0/1	0	0: "Welcome" in the entry direction, 1: "Welcome" in the exit direction
L-19		0	0: electromagnetic lock is not locked in the middle position, 1: electromagnetic lock is locked in the middle position
L-20	0/1	0	0: infrared logic forward order, 1: infrared logic reverse order
L-21	0-16	0	Middle position indicator setting, see Status corresponding table of setting value and indicator status)
L-22	0-16	0	Admission direction open position indicator sett ing,see (Status corresponding table of setting value and indicator status)
L-23	0-16	0	Exit direction open position indicator setting ,see (Status corresponding table of setting value and indicator status)
L-24	0-16	0	Output indicator status setting durin g alarm ,,see (Status corresponding table of setting value and indicator status)
L-25	0-255	1	485 communication protocol machine number setting

9.Status correspondence table of setting value and indicator state

number	Top light2	Top light1	Side light 2	Side light1
0	close	close	close	close
1	close	close	close	open
2	close	close	open	close
3	close	close	open	open
4	close	open	close	close
5	close	open	close	open
6	close	open	open	close
7	close	open	open	open
8	open	close	close	close
9	open	close	close	open
10	open	close	open	close
11	open	close	open	open
12	open	open	close	close
13	open	open	close	open
14	open	open	open	close
15	open	open	open	open

10.Safety attentions

- Do not strike the product with hard objects.
- Handle carefully when using to avoid strong collision with hard objects.
- The product must not be exposed to water or corrosive liquids.
- If smoke or odor is found in the product, disconnect the power immediately.
- If the product is abnormal, please contact the dealer in time. Do not attempt to repair it by yourself. If you do not contact the dealer, handle it without permission, and the company will not be responsible for any damage.

10.Safety attentions

- Do not strike the product with hard objects.
- Handle carefully when using to avoid strong collision with hard objects.
- The product must not be exposed to water or corrosive liquids.
- If smoke or odor is found in the product, disconnect the power immediately.
- If the product is abnormal, please contact the dealer in time. Do not attempt to repair it by yourself. If you do not contact the dealer, handle it without permission, and the company will not be responsible for any damage.

11.Transportation and storage

- Handle the product with care when handling it.
- During the transportation and storage of the product, care should be taken in a dry and free of corrosive or explosive gas in the surrounding air, and measures should be taken to prevent moisture, rain, sun, and corrosion

10.Safety attentions

- During the normal use of the product, the damage that occurs is covered by the warranty and enjoys warranty service.
- Damage caused by:
  -Damage caused by incorrect operation in violation of operating procedures.
  -Damage caused by repairing the product without authorization.
  -The use conditions and the use environment are very bad, resulting in abnormali ties and damage.